REVISION HISTORY OF: 020-000782-01			
REV	DESCRIPTION OF CHANGE	BY	REV DATE
01	INITIAL RELEASE	JK	02/03/2015
02	SHOWED "TOP CENTER" ON ALL LENS (SHEET #3). UPDATED & ADDED COG DATA FOR COLUMNS B, C & D (SHEET #1)	JK	04/14/2015
03	DELETED PAGE 3. ADDED OPERATING ALTITUDE INFORMATION	DG	05/28/2015
04	ADDED M4X8 CALLOUT	DG	07/17/2015
05	ADDED STACKING FRAME INFORMATION SHEETS 3 AND 4	DG	09/01/2015
06	CHANGED NAME OF DRAWING TO "DWG LINE BOXER SERIES". UPDATED DRAWING TO INCLUDE BOXER 2K PROJECTORS	JMA	05/06/2016
07	UPDATE FEET ADJUSTMENT HEIGHT	KC	02/27/2017
08	ADDED LENS SPEC SHEET	GG	04/25/2017
09	ADDED 3 LENSES SHT 5/ ADDED LENS WEIGHTS. UPDATE TABLE SHT 1	SI	06/25/2018
10	NEW FOOT DIAMETER/SHT 1	SI	10/04/2018
11	ADD SHS. ACCESSORY, HANDLE RIGGING.	TA	07/11/2019

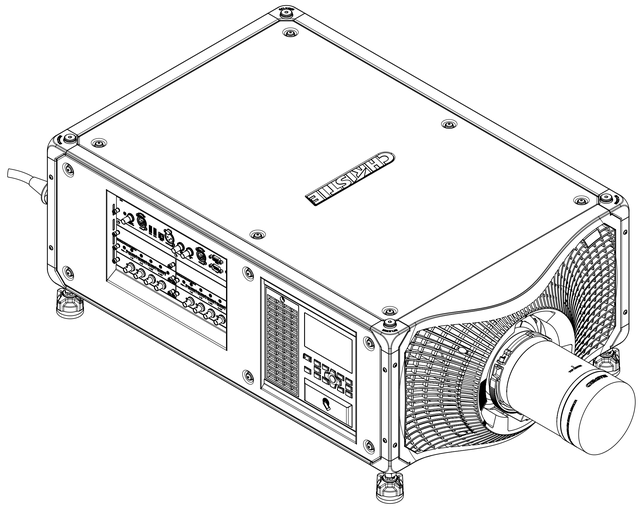

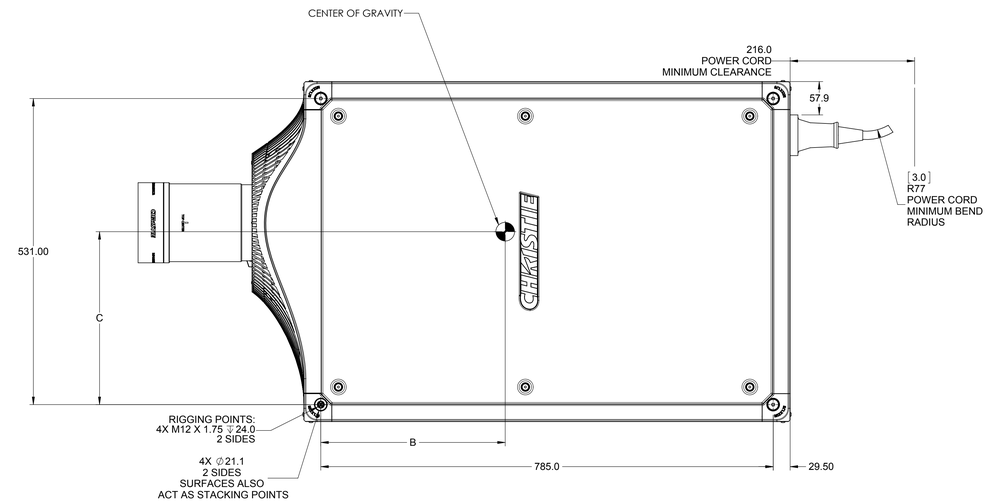

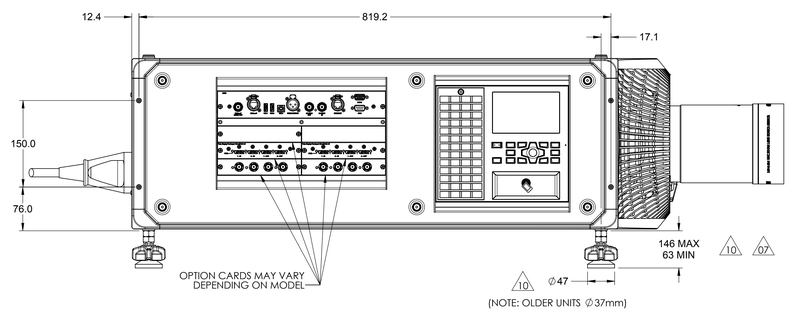

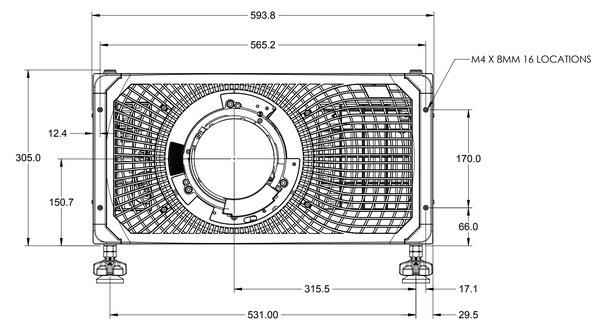

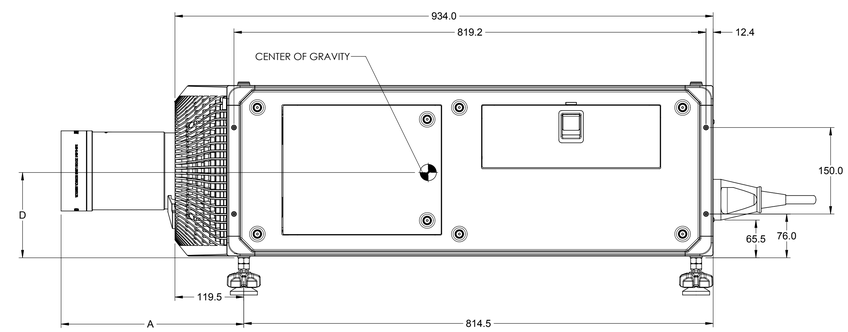

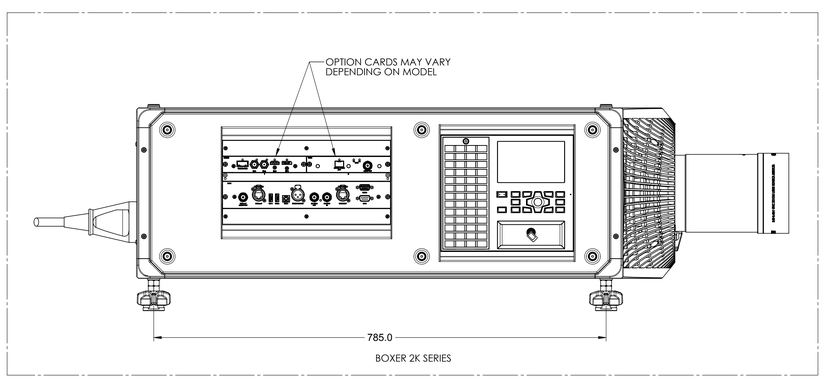

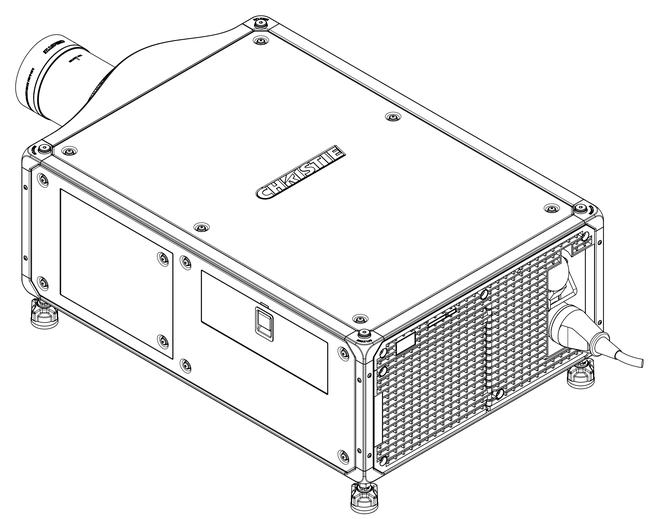

GENERAL NOTES:

1. MASS: 73 KG (160 LBS) NO PROJECTION LENS
2. MASS STACKING FRAME: 56KG (123.5LBS)

3. AMBIENT AIR TEMPERATURE: 5°C (41°F) TO 40°C (104° F) MAX UP TO 1500 FEET
4. OPERATING ALTITUDE: 10 000 FEET MAX AT 5°C TO 25°C AMBIENT
5. ROOM HEAT LOAD: 13,000 BTU/h, 3800W

6. POWER REQUIREMENTS:
   1. FULL POWER MODE (SIX LAMP MODE): SINGLE PHASE 200-240 V, 19A MAX (INPUT 1) (3800W)
   2. SINGLE LAMP MODE: SINGLE PHASE 100-240 V, 13.8A MAX (INPUT 2) (1380W)
   3. STANDBY: APPROX. 24W

7. PRODUCT HAS BEEN OPTIMIZED TO RUN IN LANDSCAPE ORIENTATION (AS SHOWN). OPERATING IN OTHER ORIENTATIONS WILL REDUCE LAMP LIFE

	CDS P/N	PROJECTION LENS	A	B	C	D	WEIGHT kg
	144-110103-XX	0.72:1	323	310	305	150	6.5
	144-111014-XX	0.9:1	335	307	305	140	6.9
	144-103105-XX	1.13-1.31:1	311	303	305	145	7.6
	144-104106-XX	1.31-1.63:1	259	313	305	140	6.7
	144-105107-XX	1.63-2.17:1	248	329	305	145	6.2
	144-106108-XX	1.99-2.71:1	190	319	305	150	5.9
	144-107109-XX	2.71-3.89:1	248	313	305	150	6.0
	144-108100-XX	3.89-5.43:1	320	307	305	145	7.3
	144-109101-XX	4.98-7.69:1	366	303	305	140	7.5
09	144-129103-XX	1.13-1.66:1	327	305	305	145	7.0
09	144-130105-XX	1.45-2.17:1	278	307	305	145	6.7
09	144-131106-XX	1.95-3.26:1	193	318	305	142	5.3
	WITHOUT PROJECTION LENS		120	351	300	150	73

UNITS INCHES ☐ MILLIMETRES ☒

UNLESS OTHERWISE SPECIFIED

INTERPRET DIMENSIONS AND TOLERANCES PER ASME Y14.5M-1994

TOLERANCES APPLY AS SHOWN BELOW

DECIMAL PLACES	INCHES	MILLIMETRES
.XXX	± .063	± 1.6
.XX	± .125	± 3.1
.X	± .250	± 6.3

ANGULAR DIMENSIONS	
XX°	±1.0°
XX.X°	±0.5°

DRAWN BY: J.KRUUCKI
DRAWN DATE: 12/05/2014
APPROVED BY: I. MCGILL
APPROVAL DATE: 08/09/2019

PROPRIETARY

NOT TO BE DISCLOSED OR REPRODUCED IN ANY MANNER WITHOUT THE EXPRESS WRITTEN PERMISSION OF CHRISTIE

THIRD ANGLE PROJECTION

CHRISTIE DIGITAL SYSTEMS USA, INC.
CHRISTIE DIGITAL SYSTEMS CANADA, INC.

PART DESCRIPTION: DWG LINE BOXER SERIES

SIZE: E | PART NUMBER: 020-000782-01 | REVISION: 11

SCALE: 1:4 | MASS: - LBS [- KG] | SHEET 1 OF 6

APPROXIMATE AIR FLOW

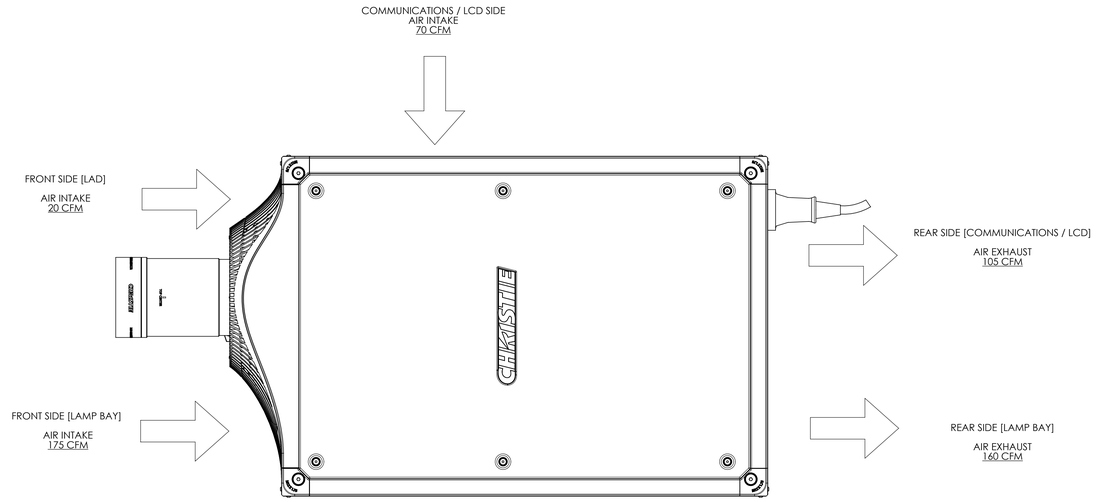

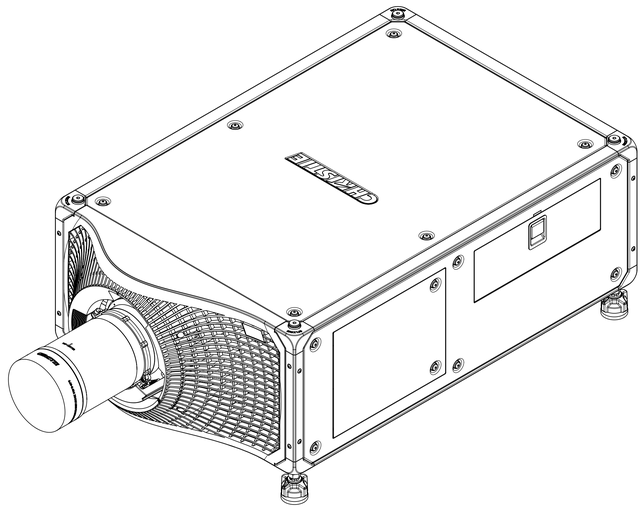

MINIMUM CLEARANCE FOR MAINTENANCE ACCESS

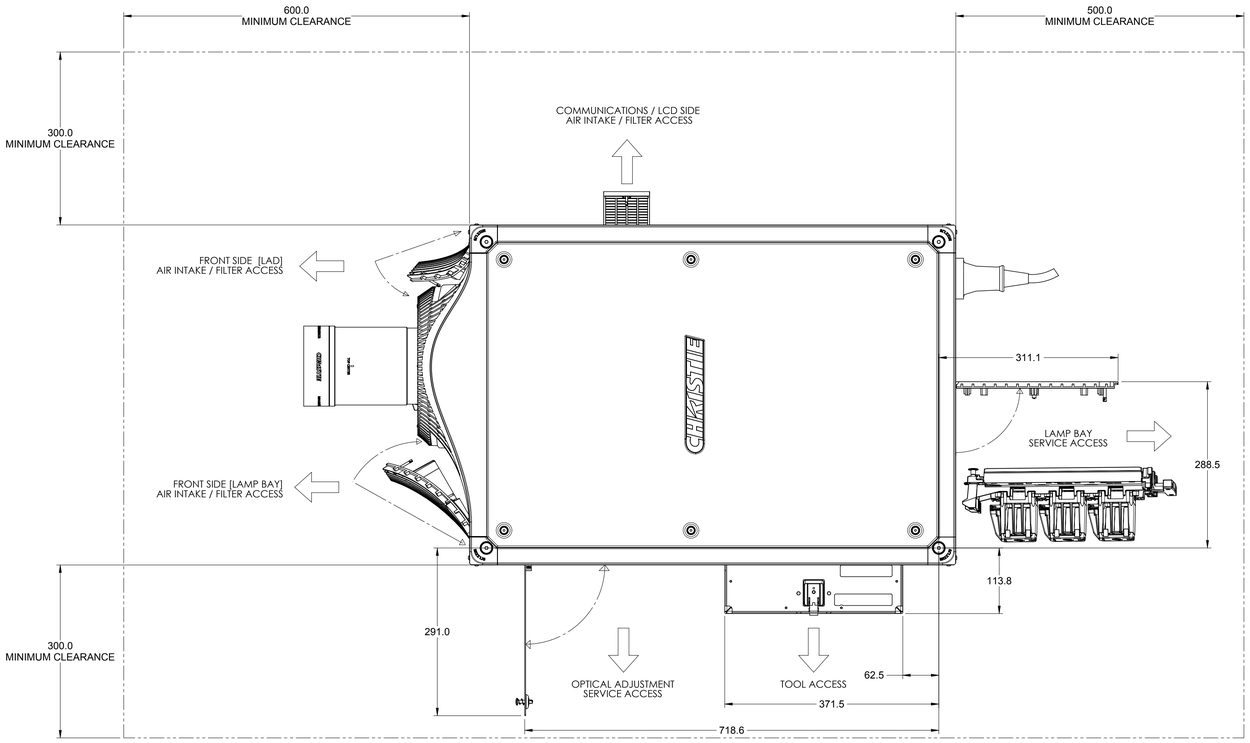

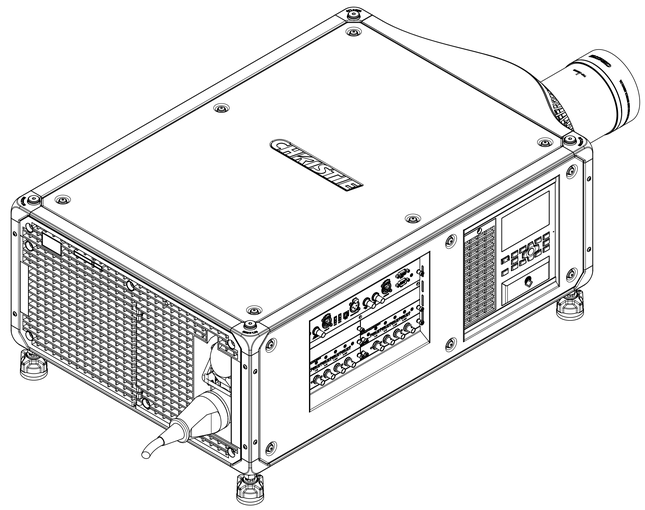

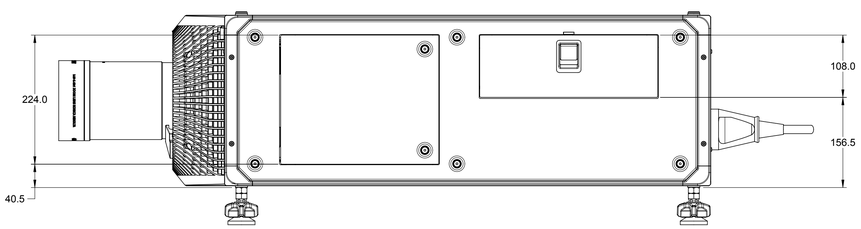

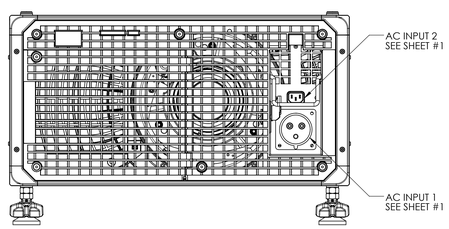

PROPRIETARY
NOT TO BE DISCLOSED OR REPRODUCED IN ANY MANNER WITHOUT THE EXPRESS WRITTEN PERMISSION OF CHRISTIE

CHRISTIE
CHRISTIE DIGITAL SYSTEMS USA, INC
CHRISTIE DIGITAL SYSTEMS CANADA, INC

SIZE	PART NUMBER	REVISION
E	020-000782-01	11

SCALE	MASS	
1:4	- LBS [- KG]	SHEET 2 OF 6

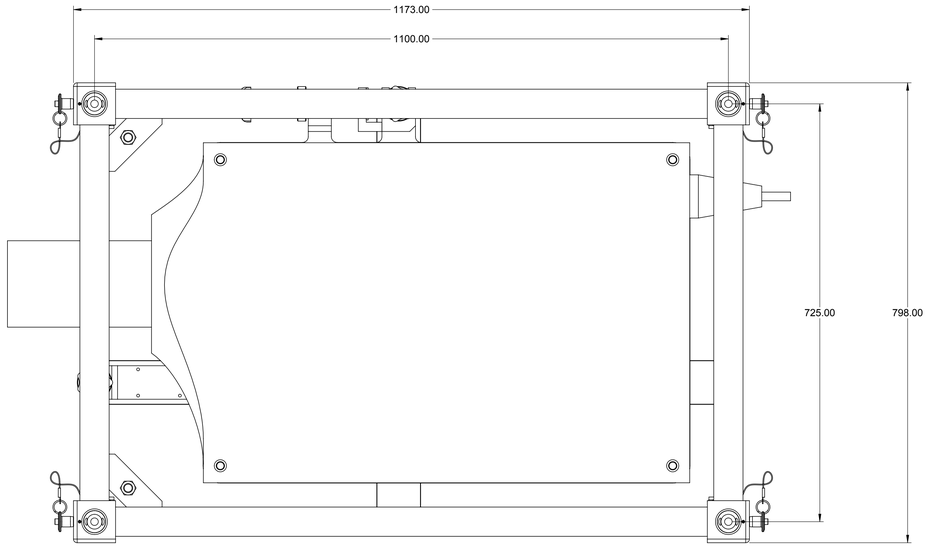

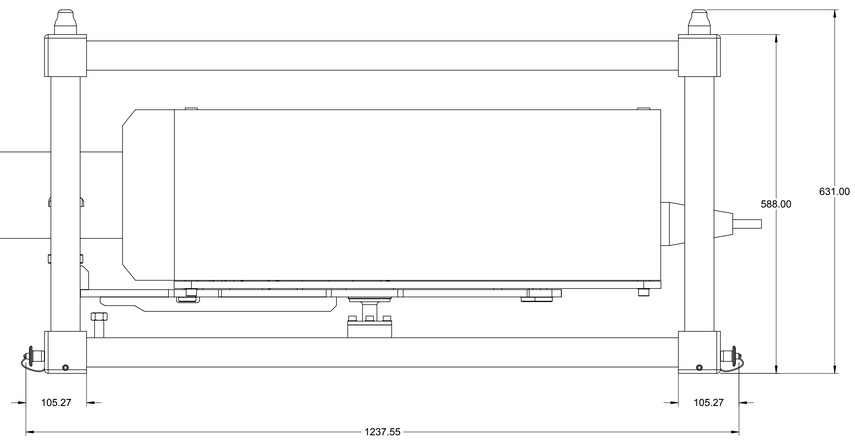

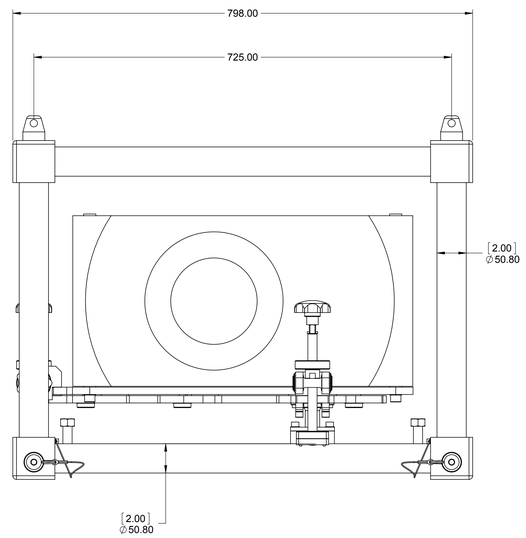

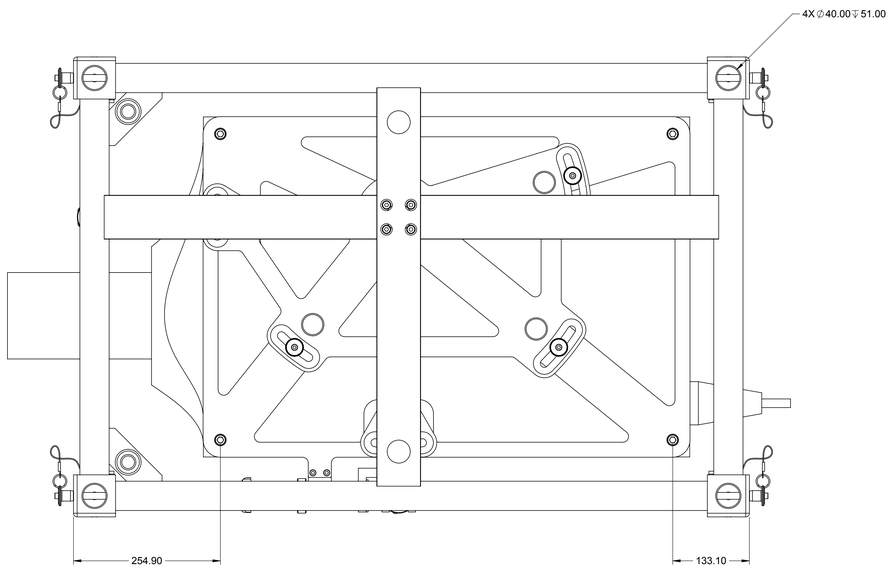

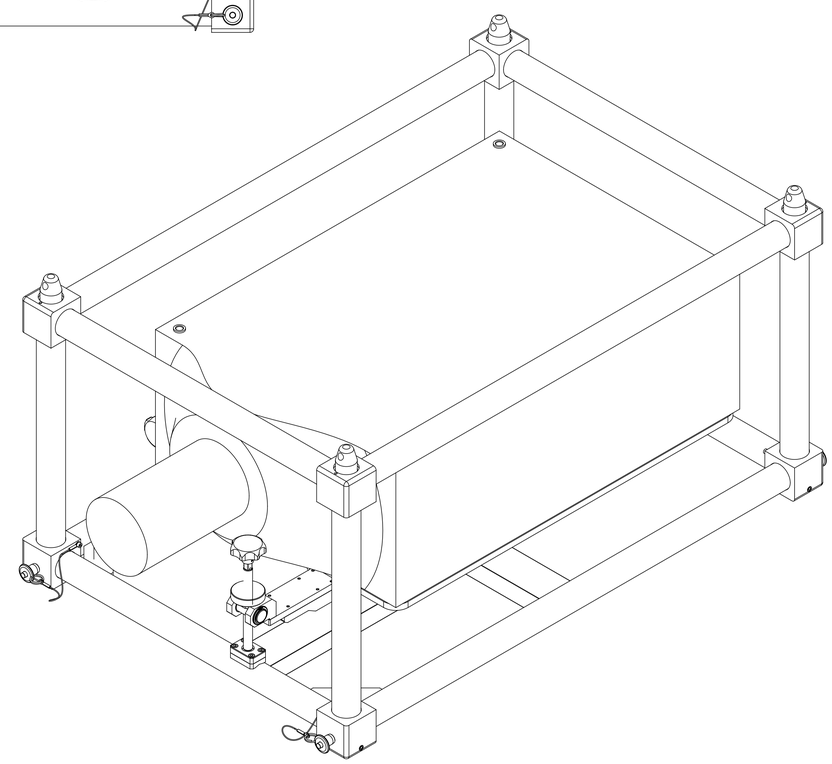

PROPRIETARY
NOT TO BE DISCLOSED OR REPRODUCED IN ANY MANNER WITHOUT THE EXPRESS WRITTEN PERMISSION OF CHRISTIE

CHRISTIE
CHRISTIE DIGITAL SYSTEMS USA, INC.
CHRISTIE DIGITAL SYSTEMS CANADA, INC

SIZE	PART NUMBER	REVISION
E	020-000782-01	11

SCALE	MASS	
1:4	- LBS [- KG]	SHEET 3 OF 6

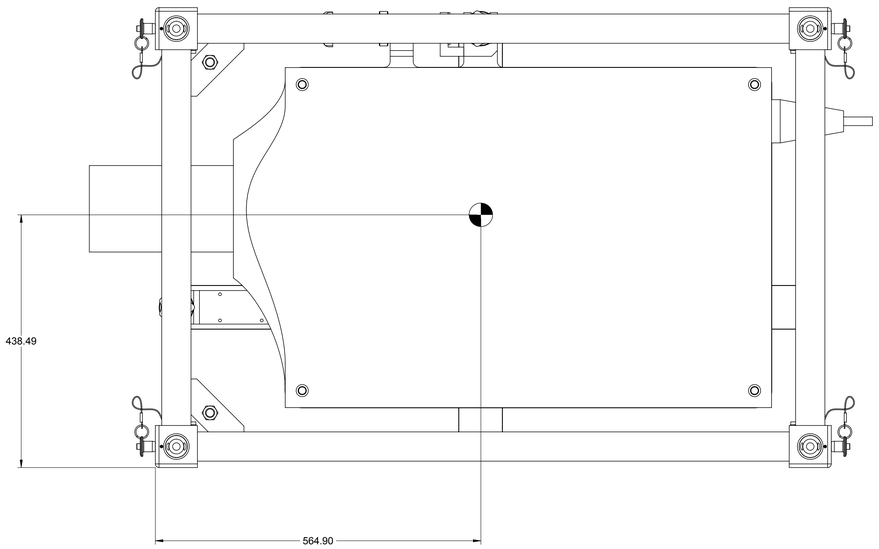

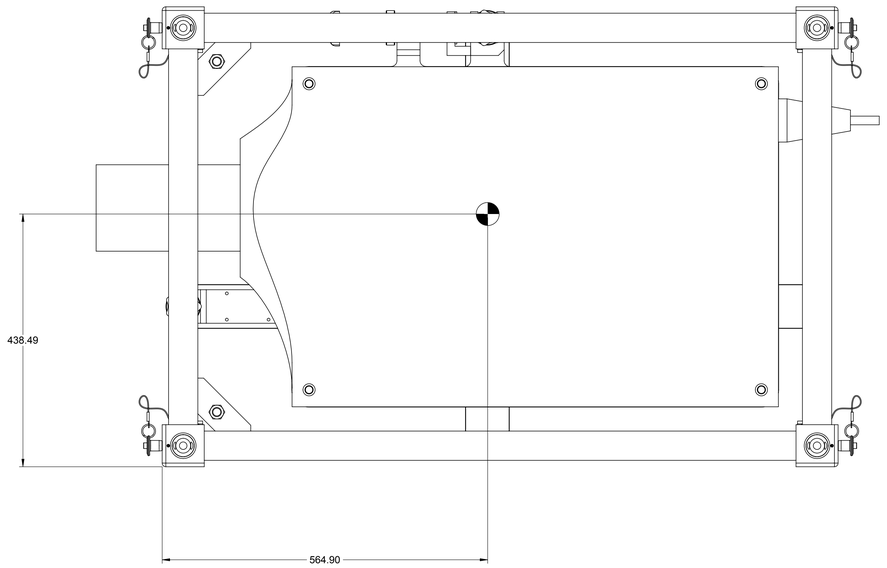

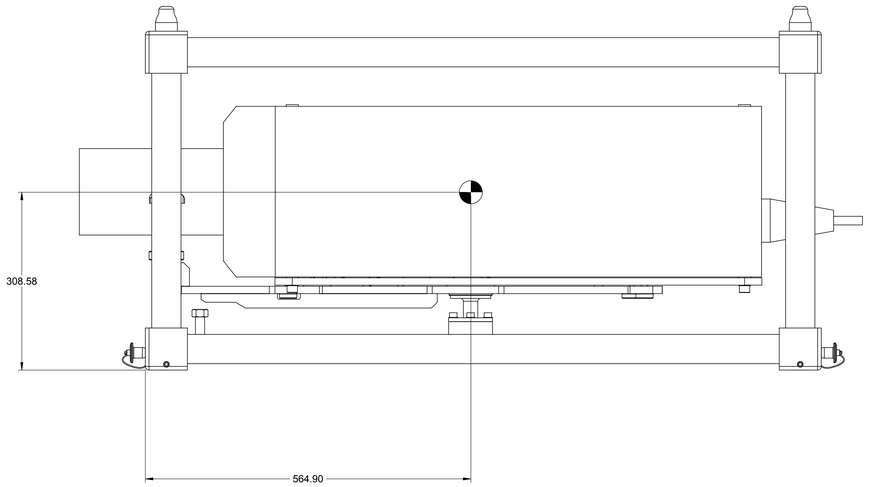

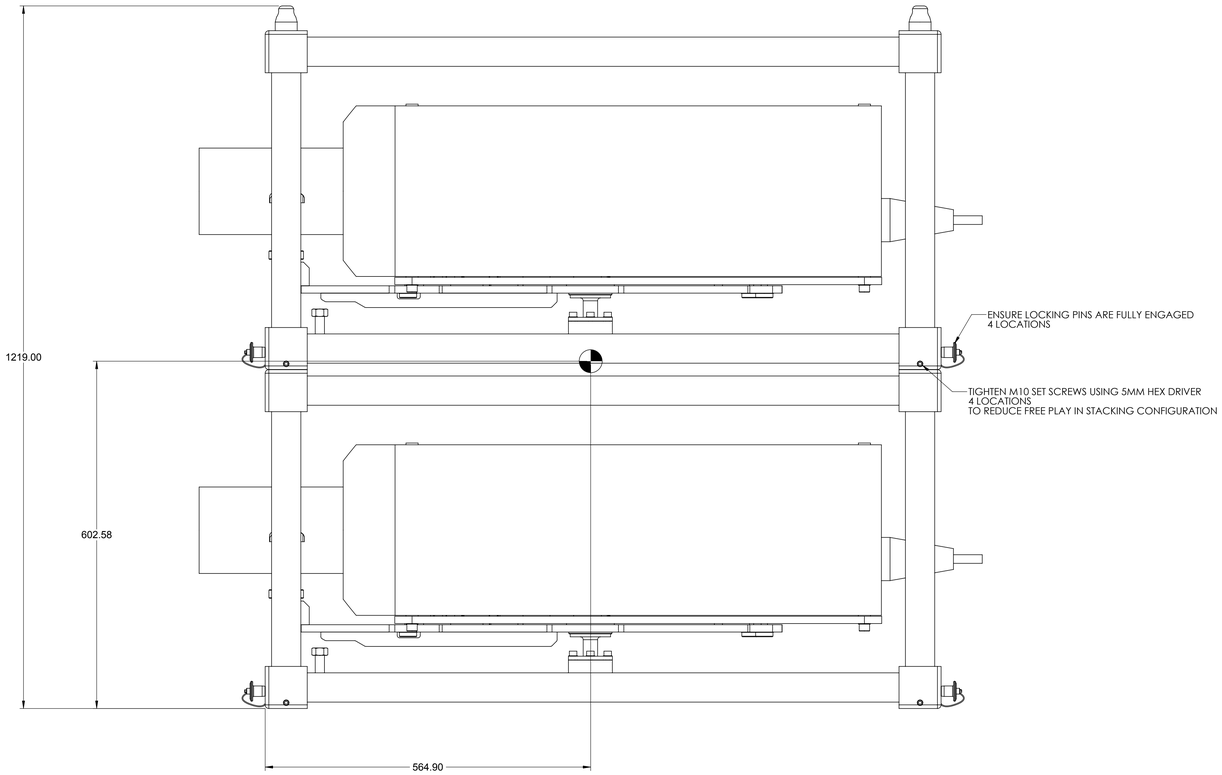

STACKED CONFIGURATION

NOTE: CENTER OF GRAVITY WAS MEASURED USING LENS 144-110103-XX ASSY LENS 0.72:1 HB FIXED

PROPRIETARY
NOT TO BE DISCLOSED OR REPRODUCED IN ANY MANNER WITHOUT THE EXPRESS WRITTEN PERMISSION OF CHRISTIE

CHRISTIE DIGITAL SYSTEMS USA, INC
CHRISTIE DIGITAL SYSTEMS CANADA, INC

SIZE	PART NUMBER	REVISION
E	020-000782-01	11
SCALE 1:4	MASS - LBS [- KG]	SHEET 4 OF 6

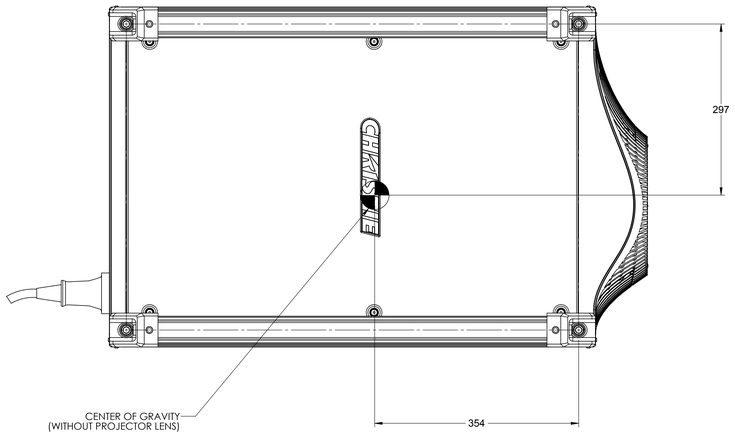

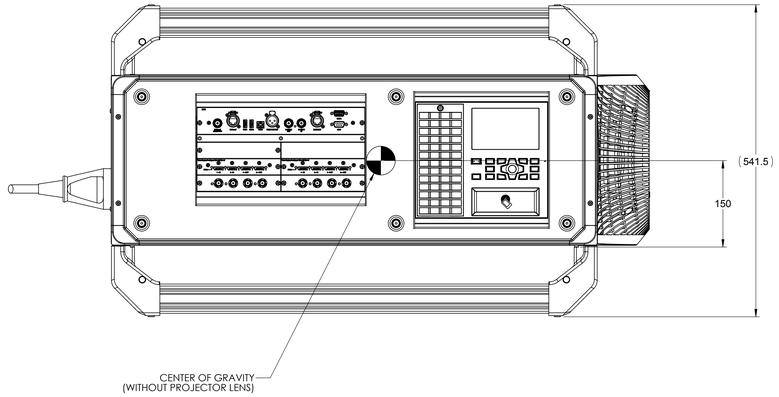

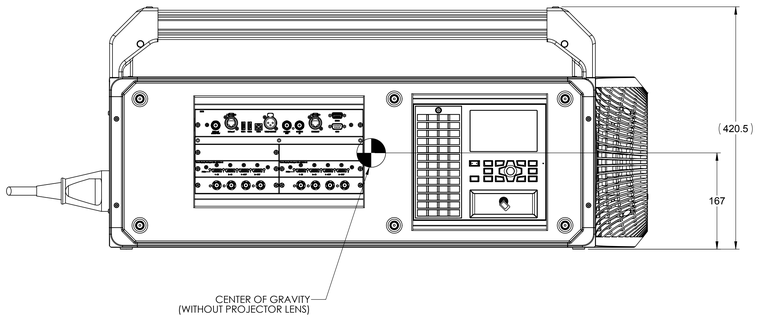

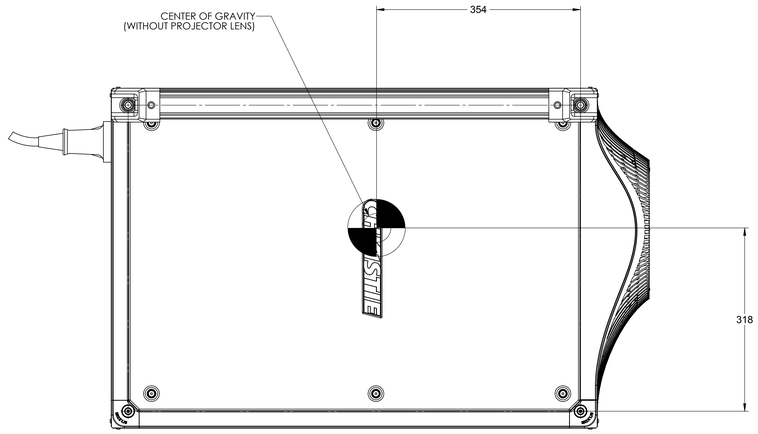

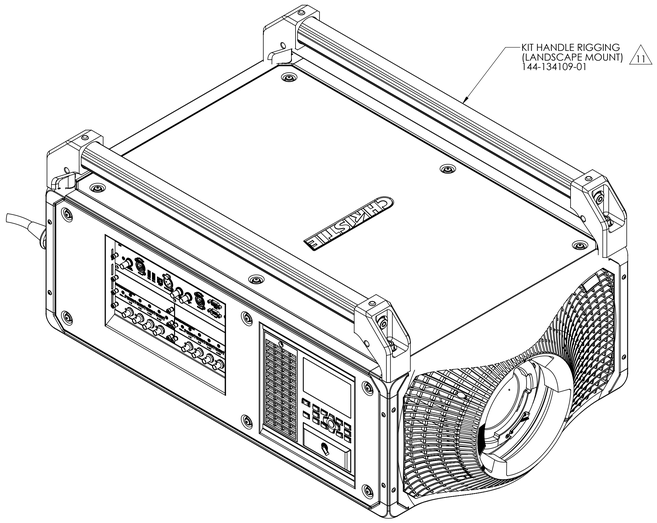

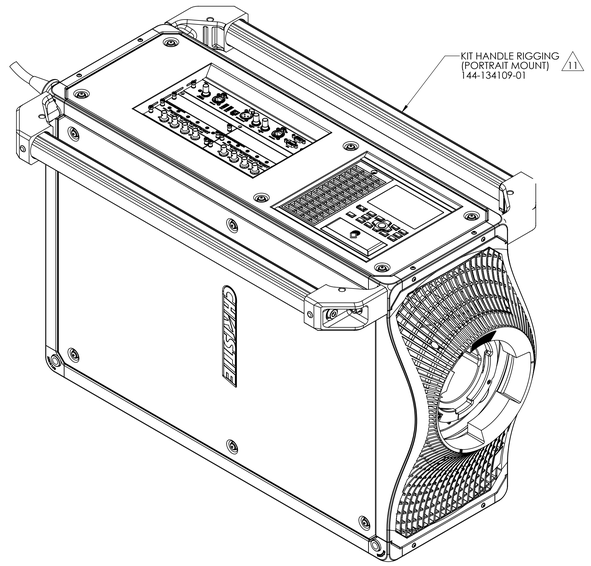

PROPRIETARY
NOT TO BE DISCLOSED OR REPRODUCED IN ANY MANNER WITHOUT THE EXPRESS WRITTEN PERMISSION OF CHRISTIE

CHRISTIE
CHRISTIE DIGITAL SYSTEMS USA, INC.
CHRISTIE DIGITAL SYSTEMS CANADA, INC.

SIZE	PART NUMBER	REVISION
E	020-000782-01	11

SCALE	MASS	
1:4	- LBS [- KG]	SHEET 5 OF 6

PROJECTION LENS
0.72:1 HB FIXED
144-110103-XX

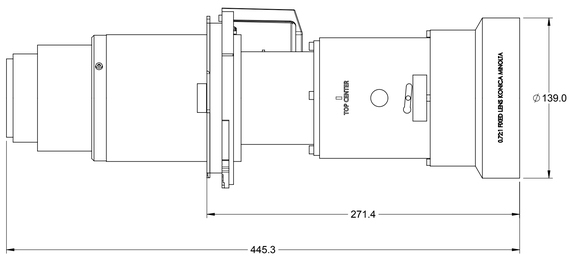

PROJECTION LENS
0.9:1 FIXED
144-111014-XX

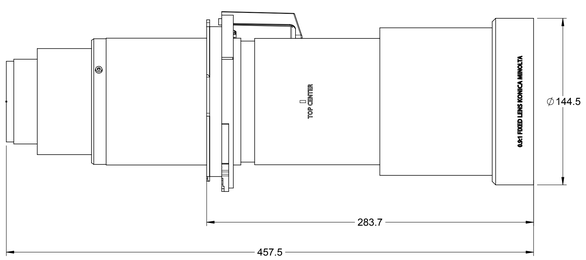

PROJECTION LENS
1.13-1.31:1 HB ZOOM
144-103105-XX

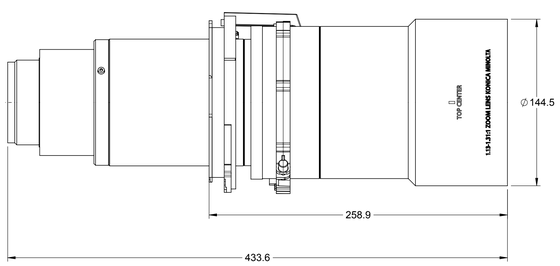

PROJECTION LENS
1.31-1.63:1 HB ZOOM
144-104106-XX

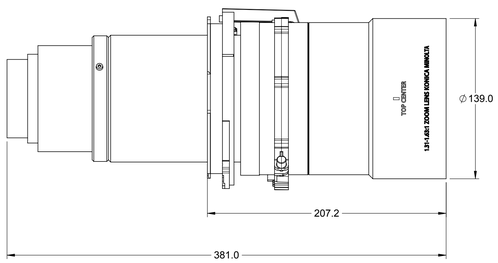

PROJECTION LENS
1.63-2.17:1 HB ZOOM
144-105107-XX

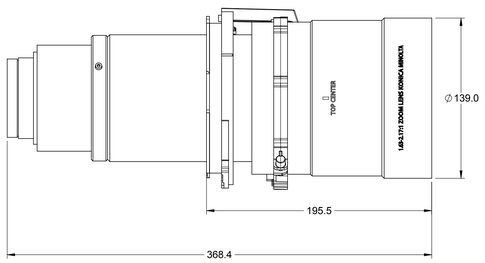

PROJECTION LENS
1.99-2.71:1 HB ZOOM
144-106108-XX

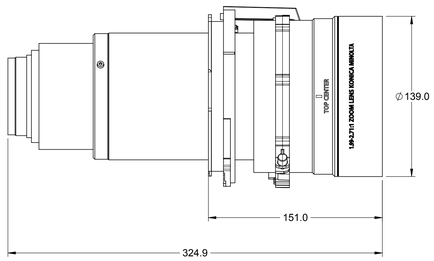

PROJECTION LENS
2.71-3.89:1 HB ZOOM
144-107109-XX

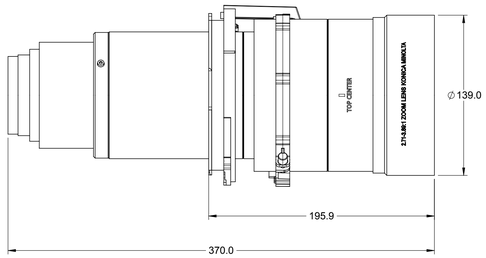

PROJECTION LENS
3.89-5.43:1 HB ZOOM
144-108100-XX

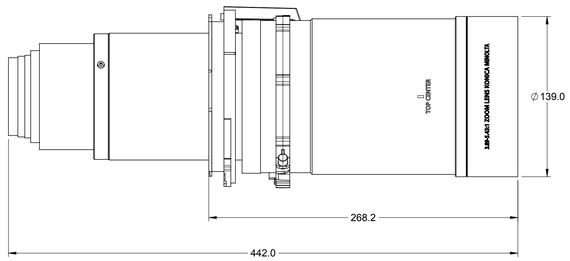

PROJECTION LENS
4.98-7.69:1 HB ZOOM
144-109101-XX

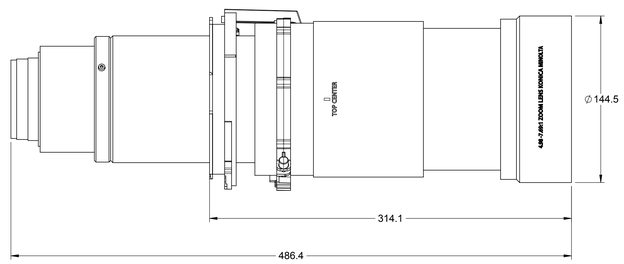

09

PROJECTION LENS
1.95-3.26:1 HB ZOOM
144-131106-XX

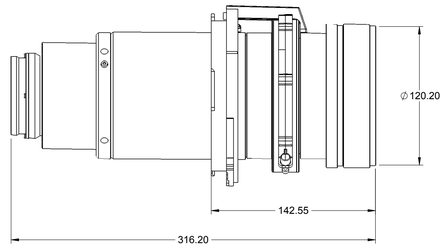

09

PROJECTION LENS
1.45-2.17:1 HB ZOOM
144-130105-XX

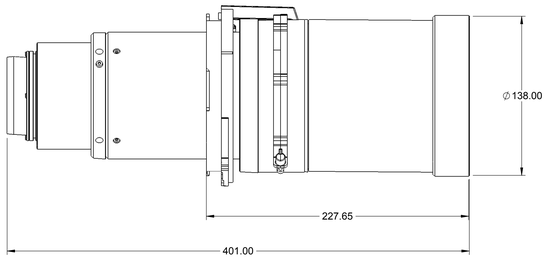

09

PROJECTION LENS
1.13-1.66:1 HB ZOOM
144-129103-XX

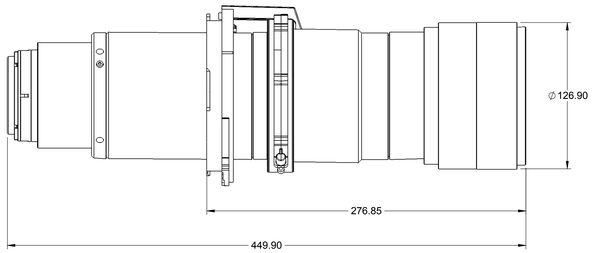

PROPRIETARY
NOT TO BE DISCLOSED OR REPRODUCED IN ANY MANNER WITHOUT THE EXPRESS WRITTEN PERMISSION OF CHRISTIE

CHRISTIE
CHRISTIE DIGITAL SYSTEMS USA, INC
CHRISTIE DIGITAL SYSTEMS CANADA, INC

SIZE	PART NUMBER	REVISION
E	020-000782-01	11

SCALE	MASS	
1:2	- LBS [- KG]	SHEET 6 OF 6